The fine difference in Swiss quality.




Sablux

Sablux. Superficial, from the bottom up.

Sablux Technik AG is an internationally renowned Swiss company leading in consulting, planning, development and realization of innovative concepts for sand blasting technology, processing technology and engineering.

Our company was founded in 1935 and has since that time been producing metal fabricates for national and international markets with over 30 employees. Since 1956 we have been developing and manufacturing high quality sand blasting units in own production for manual or automatic treatment of surfaces.

The name Sablux stands for excellent quality for the entire product palette with its own Swiss production.

The high level of know-how and the modern CNC machine park guarantee high reproducible quality. Our team of specialists alwas has ideal solutions for individual requirements.

Surface technology is our speciality.



1935	Foundation of the trade workshop. Reformation into a joint-stock company
1975	Purchase of Sablux Technik AG founded in 1956
1986	Expansion of the production, relocation from Dübendorf to Bachenbülach into own production site
1998	Purchase of a furhter property across from the existing production to expand the sand blasting technology
1999	Certification according to ISO 9001
2002	Modernisation of the CNC-machine park. Focal points: Punching-laser centre FinnPower, press brake
2004	New organisation of sales «Cheminée I Cheminée ovens» for a partnership close to the customers
2006	Opening of the new Cheminée-Exihibit in September 2006
2009	The department «Cheminée» is handed over to the German chimney construction company Kleining
2010	The departments Unit construction I Metalworking and Sand blasting technology merge to form Sablux Technik AG
2011	Integration of the department «Micro sand blasting technology» of Xintech Systems AG

Content

Sablux

The fine difference

Competence in all areas.

As a competent production company in metal processing we manufacture complex metal constructions in highest production accuracy.

Longstanding experience, broad know-how and a high measure of flexibility characterize our teams of specialists.

CAD-recorded construction and computer-automated manufacture (CAM) are further guaranteed for perfect product services.

Our strengths:

Finest metalworking.

Single and serial production. Prototypes.

Over 25 years of experience in engineering and manufacture of machine panelling.

Welded, lacquered and assembled.

E.g. switch cabinets, cabins, frames, basins, etc.

You are searching for solutions. We have them.

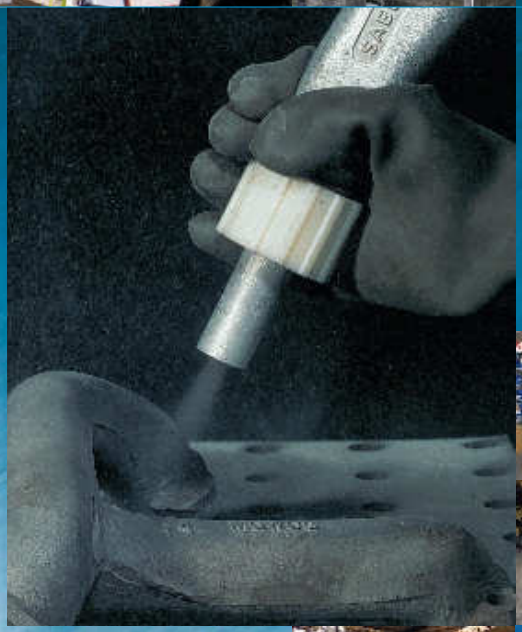

1


2


3


4


Sablux work stations

Sablux

The fine difference

5

6

1	Pre-assembly of a machine panelling.
2	Component of a machine panelling.
3	Machine panelling.
4	Special production of a palette lock.
5	Serial production dust separator casing.
6	Machine panelling.

The core of the Sablux production. Fully automatic punching-I laser centre Finn-power LP6.

Option of manless operation (ghost shift).

Cutting threads and embossing in one step.

Steel up to 8 mm.

Chrome steel up to 5 mm.

Aluminium upt to 5 mm.

Work range 1500 x 3000 mm.

With readjustment 1500 x 4000 mm.

Hydr. brake press, Beyeler:
250 tons
Brake length: 3 m and 4 m.

Your advantages:

Technically sophisticated products.

CE-conform, safe devices.

ISO 9001:2008 certified.

Modular structure.
Exchangeable. Expandable.

Strong metal construction for high stability.

Powder coated casings look good for a long time.

Device design with angled profile legs for more strength.

With raw force. With fine touch. With state-of-the-art technology.

Sablux

The fine difference

Sablux SX 155 S

Exterior dimensions::	Width	1'550 mm + 300 mm (Switchbox + lifting arm)
	Depth	1'080 mm (without curve + suction)
	Height	1'750 + 550 mm (opened cabin) 1'750 mm (closed cabin)
Interior dimensions:	Width	1'545 mm
	Depth	890 mm ; 970 mm (without ascending sifter)
	Height	780 mm ; 840 mm (without gun holder)
Weight:	approx. 340 kg	
Pressurized air connection:	G 3/4" with screw coupling. 19 mm inside diameter.	
Grid:	3-piece, carrying capacity 340 kg surface load (higher load upon inquiry).	

1 2 3 4 5

Sand blasting gun:	Injector principle, high performance gun «Power-shot» type 140, Standard equipment: Borcarbide adapter + sand nozzle Ø 11 mm, Sand nozzle ceramic optional. Air nozzle made of rust free steel Ø 5 mm. Air consumption approx. 60 m³/h bei 400 kPa (4 bar) operation pressure. When using sand nozzles with smaller or larger Ø the air nozzle need to be adapted.
Gun holder:	Adjustable on all sides, mounted on full-length crossbeam.
Foot pedal:	Electrical, with protective hood IP 65.
Sand dispenser:	To regulate the sand quantity, easily removeable for possible replacement of blasting material.
Cabin lid:	Front wall 2-piece, is pushed up vertically by 2 handles, weight balance through gas pressure springs. Cabin is accessible by crane.
Sighting window:	Without blind spot, double glazing with attrition-proof glass, replaceable in seconds.
Lighting:	2 fluorescent pipes with 55 W, 230 V each, mounted in dustproof cabins on the roof of the cabin.
Sideshift:	In both side walls 250x240 mm, to slide bar material through, additionally covered with a rubber curtain.
Hand holes:	Sealed twice with wear proof special rubber (optionally with permanent rubber gloves).
Switchbox:	Dustproof, mounted on the right of the cabin, with main switch (lockable), commando switch, contactors and control fuse.
Electr. connection:	230/400 V, 50 Hz. Connecting value: kW depending on dust separator (special voltages possible).
Manometer:	In the right cabin leg, measuring range 0–1'000 kPa (0–10 bar).
Pressire reducing valve:	self-ventilating, in the right cabin leg, control range 0–900kPa (0–9 bar).
Safety switch:	Jet automatically interrupted when cabin is opened (suva conform).
Dust exhaust:	Connecting nozzles at the back wall (ø 100 mm).
Dust separator:	The Sablux-offer incldes a selection of different dust separators. The right adjustment is the requirement for ideal operation of the blasting unit.

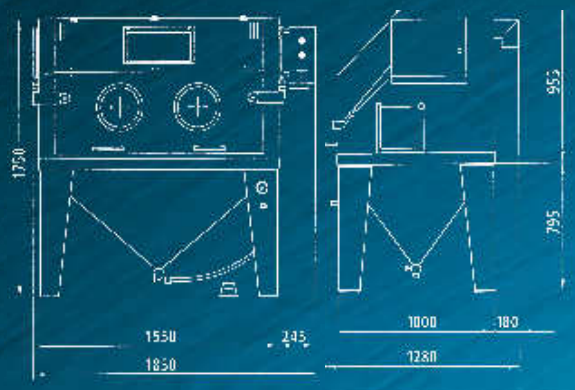

1	Rotating drum Ø 565mm, to process larger bulk material in smaller batches
2	Rotating drum aggregate type DK 141, drums Ø 565mm with various hole intervals allow the economic processing of your bulk material. The integrated outlet valve guarantees ideal cleaning of the pieces after processing.
3	Double rotary drum aggregate type DK 75 drums Ø 260mm with various hole intervals allow the economic processing of your bulk material.
4	Manual turntable, useable instead of the middle grid, available in the Ø 600mm und Ø 750mm. Central loads up to 300 kg possible.
5	Turntable drive Ø 600 bis Ø 750mm with 24V safety voltage, unit equipped with double foot pedal.

Sablux SX 115 S

Exterior dimensions:	Width	1'150 mm + 300 mm (Swtichbox + lifting arm)
	Depth	1'080 mm (without curve + suction)
	Height	1'750 + 550 mm (opened cabin) 1'570 mm (closed cabin)
Interior dimensions:	Width	1'145 mm
	Depth	890 mm ; 970 mm (without ascending sifter)
	Height	780 mm ; 840 mm (without gun holder)
Weight:	approx. 250 kg	
Pressurized air connection:	G 3/4" with screw coupling. 19 mm inside diameter.	
Grid:	2-piece, carrying capacity 200 kg surface load (higher capacity upon inquiry).	

1 2 3 4 5

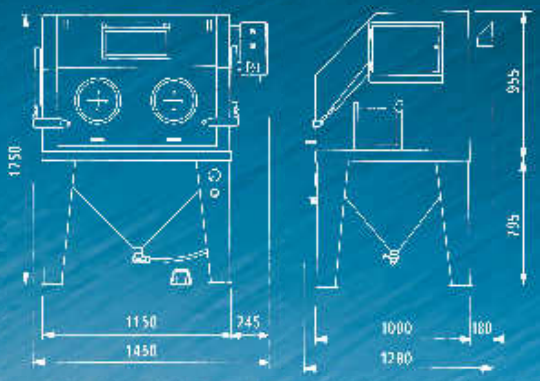

Sand blasting gun:	Injector principle, gigh performance gun «Power-shot» type 100, Standard equipment: Borcarbide adapter + Sand nozzle ø 10 mm, Sand nozzle ceramic optional. Air nozle made of rust free steel ø 4 mm. Air consumption approx. 40 m³/h at 400 kPa (4 bar) operation pressure. When using sand nozzles with smaller or larger Ø the air nozzle need to be adapted.
Gun holder:	Adjustable on all sides, mounted on full-length crossbeam.
Foot pedal:	Electrical, with protective hood IP 65.
Sand dispenser:	To regulate the sand quantity, easily removable for posssible replacement of blasting material.
Cabin lid:	Front wall 2-piece, is pushed up vertically by 2 handles, weight balance through gas pressure springs. Cabin is accessible by crane.
Sighting window:	Without blind spot, double glazing with attrition-proof glass, replaceable in seconds.
Lighting:	2 fluorescent pipes with 55 W, 230 V each, mounted in dustproof cabins on the roof of the cabin.
Sideshift:	IIn both side walls 250 x 240 mm, to slide bar material through, additionally covered with a rubber curtain.
Hand holes:	Sealed twice with wear proof special rubber (optionally with permanent rubber gloves)
Switchbox:	Dustproof, mounted on the right of the cabin, with main switch (lockable), commando switch, contactors and control fuse.
Electr. connection:	3 x 400 W, 50 Hz. Connecting value: kW depending on dust separator (special voltages possible).
Manometer:	In the right cabin leg, measuring range 0–1'000 kPa (0–10 bar).
Pressure reducing valve:	self-ventilating, in the right cabin leg, control range 0–900 kPa (0–9 bar).
Safety switch:	Jet automatically interrupted when cabin is opened (suva conform).
Dust exhaust:	Connecting nozzles at the back wall (Ø 100 mm).
Dust separator:	The Sablux-offer includes a selection of different dust separators. The right adjustment is the requirement for ideal operation of the blasting unit.
1	Rotating druml Ø 565mm, to process larger bulk material in smaller batches
2	Rotating drum aggregate type DK 141, drums Ø 565mm with various hole intervals allow the economic processing of your bulk material. The integrated outlet valve guarantees ideal cleaning of the pieces after processing.
3	Double rotary drum aggregate type DK 75 Körbe Ø 260mm with verious hole intervals allow the economic processing of your bulk material.
4	Manual turntable, useable instead of the middle grid, available in the Ø 600mm and Ø 750mm. Central loads up to 300kg possible.
5	Turntable drive Ø 600 to Ø 750mm with 24V safety voltage, unit equipped with double foot pedal.

Sablux SX 90 S

Exterior dimensions:	Width	900 + 300 mm (Switchbox + lifting arm)
	Depth	780 mm (without curve + suction)
	Height	1'660 + 320 mm (opened cabin) 1'660 mm (closed cabin)
Interior dimensions:	Width	895 mm
	Depth	610 mm 670 mm (without ascending sifter)
	Height	545 mm
Weight	approx. 170 kg	
Pressurized air connection:	G 3/4" with screw coupling. 19 mm inside diameter.	
Grid:	2-piece, carrying capacity, 100 kg surface load (higher capacity upon iquiry).	

1 2 3

Sand blasting gun:	Injector principle, gigh performance gun «Power-shot» type 100, Standard equipment: Borcarbide adapter + Sand nozzle ø 10 mm, Sand nozzle ceramic optional. Air nozle made of rust free steel ø 4 mm. Air consumption approx. 40 m³/h at 400 kPa (4 bar) operation pressure. When using sand nozzles with smaller or larger Ø the air nozzle need to be adapted.
Gun holder:	Adjustable on all sides, mounted on full-length crossbeam.
Foot pedal:	Electrical, with protective hood IP 65.
Sand dispenser:	To regulate the sand quantity, easily removable for possible replacement of blasting material.
Cabin lid:	Front wall 2-piece, is pushed up vertically by 2 handles, weight balance through gas pressure springs. Cabin is accessible by crane.
Sighting window:	Without blind spot, double glazing with attrition-proof glass, replaceable in seconds.
Lighting:	2 fluorescent pipes with 55 W, 230 V each, mounted in dustproof cabins on the roof of the cabin.
Hand holes:	Sealed twice with wear proof special rubber (optionally with permanent rubber gloves)
Switchbox:	Dustproof, mounted on the right of the cabin, with main switch (lockable), commando switch, contactors and control fuse.
Electr. connection:	230/400 V, 50 Hz. Connecting value: kW depending on dust separtor (special voltages possible).
Manometer	In the right cabin leg, measuring range 0–1'000 kPa (0–10 bar).
Pressure reducing valve:	self-ventilating, in the right cabin leg, control range 0–900 kPa (0–9 bar).
Safety switch:	Jet automatically interrupted when cabin is opened (suva conform)
Dust exhaust:	Connecting nozzles at the back wall (Ø 100 mm).
Dust separator:	The Sablux-pffer includes a selection of differenz dust separators. The right adjustment is the requirement for ideal operation of the blasting unit.

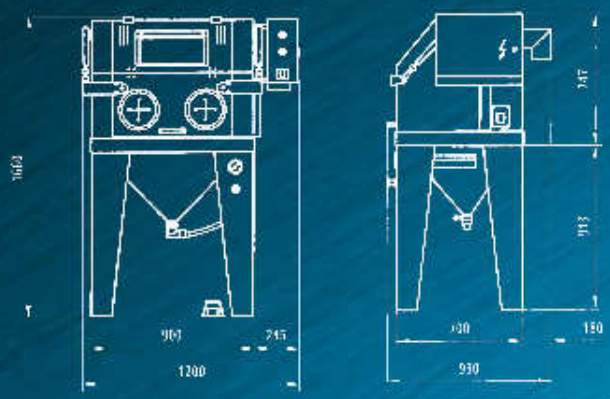

1	Manual turntable Ø 400mm, useable instead of the grid. Central capacities up to 80kg possible.
2	Rotating drum aggregate type DK 75, drums Ø 260mm with various hole intervals allow the economic processing of your bulk material.
3	Double rotary drum aggregate type 75 special. To process smallest bulk material that allow only very low acceleration and process pressures for realization. Drums available in various materials and hole intervals.

Motions that adapt to your work piece and component.

The Sablux series are universal and can be adapted exactly to your needs. Gun motions, no matter whether vertical, horizontal and/or in swivel system are designed according to your specifications. Strike lengths and version are installed outside of the cabin protected against dust according to your requirements to the units.

Gun motion

1 Gun motion with 6 valves in swivel system. Drive over gear engine, angle adjustable by excenter.

Outlet valves mounted on the sand blasting valves serve the ideal cleaning of the work pieces after blasting.

Exterior dimensions:	Width	550mm+100mm (Connections and limit switch)
	Depth	460mm+220mm (with adjoining dust separator)
	Height	810mm
Interior dimensions:	Width	545mm
	Depth	370mm
	Height	300mm (Middle)
Weight:	Cabin	40 kg
	Dust separator	38 kg
	Total	78 kg

Sablux SX 60 S

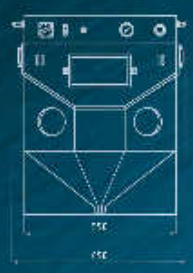

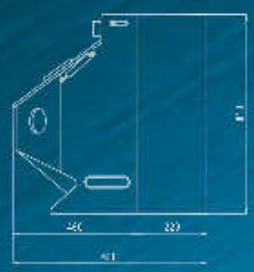

Pressurized air connect.:	G 1/4" Tube nipple 10 mm inner tube dimension
Sand blasting gun:	Gun type 65. Standard equipment: Sand nozzle ceramic Ø 6mm, Air nozzle Ø 2mm made of rust free steel Air consumption apprx. 10 m³/h at 400 kPa (4 bar) operating pressure When using sand valves with smaller or larger Ø the air valves need to be adapted.
Grid:	2-piece.
Gun holder:	Mounted on swivel arm and adjustable.
Foot pedal:	Elctrical.
Cabin lid:	1-piece, operator-friendly, with 2 gas cylinders.
Sighting window:	Double glazing with attrition-proof glass, replaceable in seconds.
Lighting:	1 fluorescent pipe with 36W, 230 V mounted in dustproof cabin.
Hand holes:	Sealed twice with wear proof special rubber (optionally with permanent rubber gloves).
Switch box:	Main switch (lockable), regulator and control fuse
Elecrt. connection:	230 V, 50 Hz. Connecting value approx. 200 W, grid fuse shall be provided on site.
Manometer:	Measuring range 0 – 1'000 kPa (0–10 bar).
Pressure reducing valve:	self-ventilating, control range 0–1'000 kPa (0–10 bar).
Safety switch:	SJet automatically interrupted when cabin is opened (suva conform).
Dust exhaust:	Dust separator installed on back wall, with connecting nozzles.
Dust separator:	The dust separator can be installed on the back wall or set up for example underneath the table. Keep the dust tube as short as possible

Areas of application:	Specifically adequate for small workshops, for example: Garages Locksmith shops Car painting shops Repair workshops Paint shops etc.
Processable materials:	Irons Non-ferrous metals Wood Plastic Stone Glass etc.

Sablux LeanBlast 1000 S

1

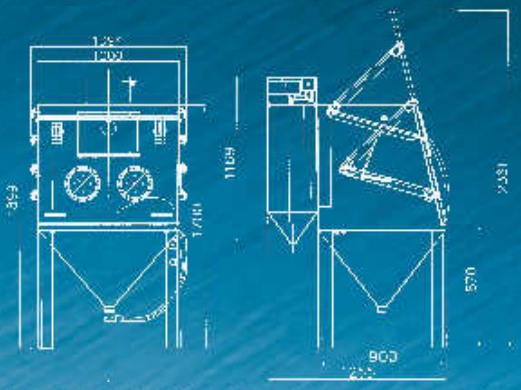

Exterior dimensions:	Width	1125mm
	Depth	1250mm
	Height	1900mm (closed door)
		2365mm (opened door)
Work room:	Width	990mm
	Depth	800mm
	Height	840mm (Middle)
Weight:	210 kg	
Air consumtpion at 4bar:	40 m3/h	
Grid:	1-piece	
Sand blasting gun:	Injector principle, high performance gun «Power-shot» type 100, Standard equipment: Sand nozzle ceramic Ø 10 mm or bor-carbide adapter + sand nozzle Ø 10mm. Air nozzle made of rust free steel Ø 4 mm. When using sand nozzles with smaller or larger Ø the air nozzles need to be adapted.	
Gun holder:	Adjustable on all sides, mounted on full-length crossbeam	
Interior lighting:	60 Watt.	
Electr. connection:	1 x 230 V, connecting value approx. 500 W	
Dust exhaust:	Dust separator installed on back wall, with connecting nozz-les.	
Dust separator:	Integradted on back wall with 1 filter cartridge 600 m³/h	
1	Manual turntable ø 600 mm, useable instead of the grid. Central capacities up to 80 kg possible.	

Sablux filter technology is designed for different dust types in high concentrations.

It can also be used independently of sand blasting units.

Dust separator Type IS 852

The standard product.

The filter unit type IS 852 rounds off your unit concept, matching the sand blasting units SX 90 S to SX 155 S. Next to manual filter cleaning at the oush of a button via integrated pressure tank, the easily useable dust drawer also belongs to the standard equipment.

Connection value:	230 / 400V. On site pre-fuse 3 x 10A.
Usage:	BIn standard cabins, resp. usage of 1 injection gun.
Dimensions:	500 x 500 x 1'740 mm (Standard with dust drawer and pressure cone).
Weight:	approx. 90 kg
Lacquer:	RAL 7035 light grey
Option:	mobile dust container. Automatic filter cleaning (Control built onto dust separator or in the switchbox of the unit). Sablux-filter technology is designed for differenz dust types in high concentrations. It can also be used independent of sand blasting units.

Dust separator Typ IS 1500|2000

For pressure sand blasting system and|or when merging several blasting cabins

Connecting value:	230 / 400V. On site pre-fuse 3 x 10A.
Usage:	For 3 or more injection guns or in a pressure blasting system with podium or deep pit.
Dimensions:	740 x 640 x 2050 mm with dust drawer
	740 x 640 x 2400 mm with mobile dust container as an option
	740 x 640 x 2115 mm with dust drawer and pressure cone
	740 x 640 x 2465 mm with mobile dust container and pressure cone
Weight:	approx. 200 kg
Lacquer:	RAL 7035 light grey
Option:	Automatic filter cleaning (Control built onto dust separator or in the switchbox of the unit).

Dust separators at a nominal suction performance of 2500 m3/h and over are evaluated custom-made for the respective unit designs. In this segment all dust separators have an automatic filter cleaning with program pre-selection and a mobile dust container on rollers for easyy emptying of remaining dust.
Differential pressure monitoring of the filter fleece and silencers for noise reduction round off the equipment.

Large dimension filters

Good vision for all types of work.

Dust separator type PC 4/TV-H
with a very high water level, ideal for the realization of blasting processing via cyclone.

Filter unit PC 6/8/TV
For special models with high desired nominal suction performance, like for example when using several pressure machine types.

Dust separator PCex 12TV
for ATEX-applications.

Comparison Injector | SAD–20

The injection system.
This is adequate for accurate and continuous blasting processes. Sablux offers the matching injector gun, also in rust free versions for different unit designs and needs.
The nozzles are made of borcarbide or ceramics, depending on the blasting material.

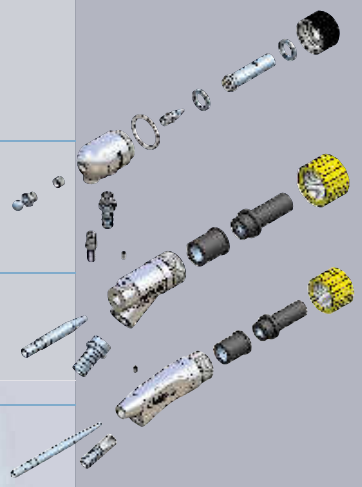

Machine:	SX 155 S
Gun:	Type 140 «Power-shot», Air nozzle Ø 5 mm, Sand nozzle Ø 11 mm
Pressure:	3 bar
Distance:	100 mm, angle 45°
Blasting material:	Normal corundum F046

The pressure blasting procedure.
Beeing equipped for large dimension tasks and high efficiency. Blasting material is pressurized in a tested pressure blasting pot.
Dosing is done by means of a pneumatic, adjustable dosing cylinder.

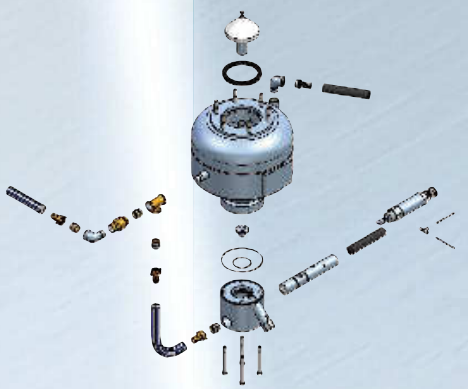

Machine:	SAD–20
Gun:	Sand tube NW 19, Sand nozzle Ø 8 mm
Pressure:	3 bar
Distance:	300 mm, angle 45°
Blasting material:	Normal corundum F046

Comparison Cyclone | Sifter unit

The cyclone.
The blasting material is cleaned from dust and dirt particles in a cyclone. The acceleration is done based on the performance of the low-pressure ventilators of the dust separator. The reusable material falls back into the storage container resp. pressure blasting pot depending on the blasting system and can be used for several circuits depending on the blasting material type.
Rubber lining is recommended for protection and value maintenance of the cyclone when using abrasive material.

1 2 3

The sifter unit.
Achieving an even roughness over the entire component can only be ensured with an effective sand processing and corresponding feed units. This this way the blasting material is constantly freed of interfering fine particles and contaminations. The material is additionally led over a magnetic separator that filters out damaged magnetic particles.
Sandblasting material with the corresponding oversized or undersized material is removed from the circuit. Thus processed, it is led back into the blasting process.

1	Level probes report possible blasting material shortage to the unit control.
2	LEasily removable magnetic separator.
3	Separating the blasting material by fine and coarse sifter inserts (mesh width selectable by customer)

Every plastic processer knows the problem of accumulations in moulding tools. Not only the cleaning of colour pigment and filling material accumulations, but also oversprayed tools and screw contaminations belong to everyday routine. Due to the usage of abrasive free blasting mediums that are available in different grain sizes, all plastic accumulations can usually be removed within in minutes without changing the structure and without damaging the engravings and separating edges. Even correctly coated pieces can be bleaned without damaging the coat layer.
As no chemicals are used and the surface to be cleaned is not subjected to increased temperatures, undesirable side effects can be excluded.

Xintech MasterClean XS 95

XINTECH Systems
by Sablux

Pressure blasting units for espacially hig performances are used to clean coarse contaminations. The blasting medium that is used is filled into a special pressure container and directly subjected to the incoming pressurized air. Due to this technology a massive acceleration of the medium is achieved which also enables an ideal cleaning effect even for massive contaminations. The MasterClean is equipped with lateral opening to clean extruder screws and similarly large components, which enable these parts to fit through.

Cabin dimensions:	W 1020 mm, D 1230 mm, H 1910 mm
Work room:	D 950 mm, D 750 mm, H 510 mm
Weight approx.:	440 kg
Air conveying quantity:	± 1'350 Ltr./min. at 5 bar and blasting nozzle 5 mm
Pressure range:	1–8 bar
Electrical connection:	230 V / 50 Hz (3 Ph+N+E)
Air connection:	G1/2"

Equipment:

Working grid made of perforated sheet metal

Replaceable, wear proof gloves, lined cover

2 side doors 410 x 430 mm

Blasting nozzle Ø 5 mm, Reducing valve and manometer 0 – 10 bar

Automatic pressure cabin

Integrated, automatic cabin dedusting and dust separating system with high performance cyclone

Foot pedal

Water separator

Integrated high performance filter system with 2 filter cartridges with automatic cleaning

Dust collecting container with fast lock

Door end switch

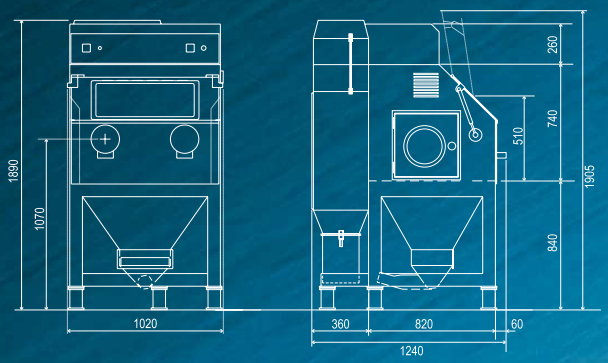

1	Mobile on rollers.
2	Locks.
3	Integrated rotating table Ø 600 mm, loading capacity up to 800 kg.
4	Version with double tank.

Automatic, absolutely abrasion free cleaning of plastic coating on screws & compounding elements. The constantly increasing quality standard demands innovative solutions.

Screws with a Ø of 14-180mm can be gleaned on a length of 1-5m (other lengths and diameters upon inquiry).
The total control of blasting and transport unit is done via simple programming of cleaning processes over a touch panel. Depending on the level of contamination, up to 5 cleaning zones can be set separately. The option of manual cleaning is guaranteed.

Screw cleaning unit

1 2 3

XINTECH Systems
by Sablux

Cabin dimensions:	W 1020 mm, D 1230 mm, H 1930 mm
Work room:	W 950 mm, D 740 mm, H 510 mm
Total weight:	815kg
Air consumption at 4 bar and blasting nozzle ø 5:	ca. 1130 l/min
Working pressure:	1.5 – 8 bar
Total connection value:	1.57kVA
Air connection:	G1/2"
Options:	Acrylic lid with or without lock
	Dust collecting container with level monitoring
	Automatic refilling of blasting material over material silo (25 kg)
	Monitoring of automatic operation

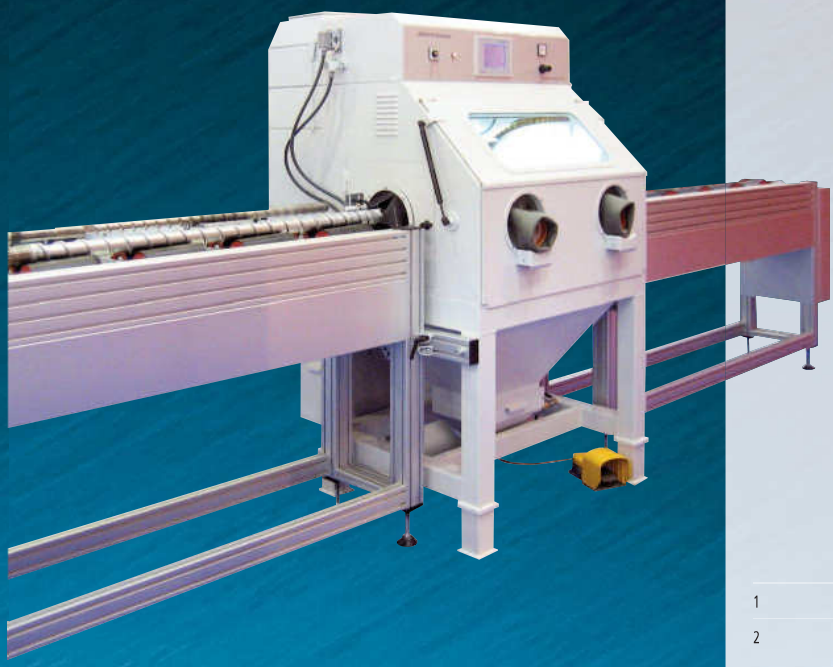

Schneckensegment vor und nach der Reinigung

1	Blasting nozzle with swivel motion
2	Simple programming of blasting process, screw feed, transport alignment etc.
3	Cleaning program: Automatic two-way transport of screws thanks to elaborate sensor technology.
	The screw can be divided into 1 to 5 zone effective length (cm) depending on the degree of contamination, and individually programmed (blasting length/feed).
	Economic, as non-contaminated zones can be skipped (saving of time and blasting mediums).
	Automatic feed calibration.

Düseneinsatz vor und nach einer Zweitstufen-Microstrahlbehandlung.

Standard-Injector-Micro blasting unit for optimization and information of tool surfaces.

All processing of metallic surfaces leave residue, for example the «white zone» after wire or sinker erosion, or residue after grinding. Very frequently, these lead to problems in the deformability of plastic parts or contaminations due to accumulations. Due to the processing of the surfaces with the usage of micro blasting technology te tools are ideally prepared for a high productivity and lifetime. The multi level procedure used here includes defined blasting mediums, whose composition and grain size is determined according to the respective case of application. Especially in plastic processing, the quality of the article to be produced strongly depends on the surface condition of the tool.

Cabin dimensions:	W 760mm (without oil/water separator) D 865 mm, H 1710mm

Xintech MasterFinish XS 75

1 2 3 4

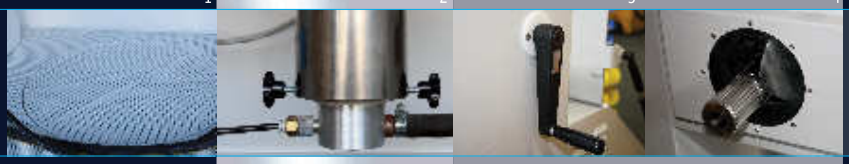

XINTECH Systems
by Sablux

Work room:	W 750mm, D 500mm, Medium utilization height 500mm
Weight approx.:	150kg
Air conveyance quantity:	395l/min
Power consumtion:	320W
Electrical connection:	230V/50Hz
Air connection:	G 1/4"

Equipment:

- Oil/Water separator
- Inside lighting 36W
- Lateral slider left and right (Opening W 400 x H 297mm)
- Viewing window with safety glass
- Blasting gun hard metal Ø 5mm
- Cleaning/air outlet valve in the blasting cabin
- Conveyor injector unit with blasting material pre-acceleration
- Automatic blasting material processing via integrated granulate separator
- Integrated regulated filter system

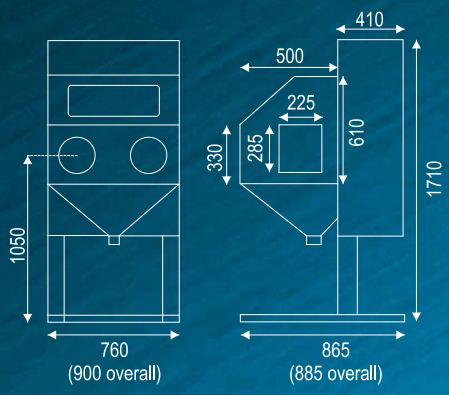

1	Integrated manual turntable Ø 400mm, loading capacity up to 800kg
2	Blasting medium drying system, performance adjustable via phase regulator with touch protection, 0–150Watt.
3	Manual or automatic height adjustment
4	Multiply sealed passages. They can be used instead of the lateral sliders.

Controlled and optimized blasting process through reproducible parameters.

Regulated blasting material quantity due to digitally adjustable frequency converter.

Continuous monitoring of the effective throughput quantity by means of ultrasound throughput seonsor (Option). Therefore no influence of the blasting material by accumulations or moisture in the blasting material.

Digital target value setting 0-6 bar of the blasting pressure set by hand or as determindes and object related data value as of date carrier (Option).

Digitally adjustable blasting medium pre-acceleration (coupled to the cabin vacuum).

Xintech DigiFinish XS 75

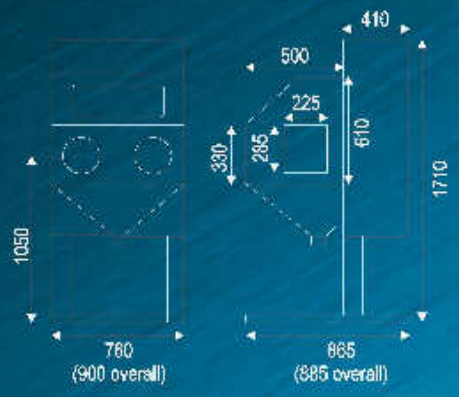

1 2 3

Always guarantees the same flowability thanks to blasting material drying, which works fully automatic over the digitally adjustable moisture thresold value.

Automatic filter cleaning over the differential pressure thresold value.

Significantly lower blasting material wear due to the regulated and moni-

tored vacuum; therefore significant cost savings and guaranteed regularity of blasting quality.

Cabine dimensions:	W 760mm (without oil/water separator) D 865mm, H 1710mm
Work room:	W 750mm, D 500mm. Medium utilization height 500mm
Weight approx.:	160kg
Air voulume capacity:	395l/min
Power consumtion:	750W
Electrical connection:	230V/50Hz
Air connection:	G 1/4"

Equipment::

Digital input of process parameters (process pressure, pre-acceleration pressure, vacuum, blasting material moisture)

Oil/water separator

Interior lighting 36W

Laterial slider left and right (opening W 400 x H 297mm)

Viewing window with safety glass

Blasting gun hard metal Ø 5mm

Cleaning/air outlet valve in the blasting room

Heating system

Conveyance injector unit with blasting material pre-acceleration

Automatic blasting material processing via integrated granulate separator

Integrated regulated filter system

1	Integrated manual turntable Ø 400mm, loading capacity up to 800kg
2	Manual or automatic height adjustment
3	Multiply sealed passages. These can be used instead of the lateral sliders.

The MicroProFinish-unit is an advance development of the successful DigiFinish unit. These blasting units have the following main differences:

The units only have a main switch. All other functions and statements are done via display.

The entire process as well as the individual process conditions and their condition parameters are displayed clearly structured on a colour display.

All process parameters are adjustable via the visulisation display in the corresponding symbol (touch screen).

All process parameters are monitored underneath each other in the highest and lowest range and can therefore not be adjusted fasely to each other or against each other.

The smooth height adjustment is done by tipping on the corresponding symbol on the display.

All elaborated and tested proess settings can be saved directly by tipping on the symbols on the dispay.

1 2

Xintech MicroProFinish XS 75

XINTECH Systems
by Sablux

Datasets saced in the unit memory can also be entered simply by tipping on the memory symbol.

The unit can only be switched on via a generated password.

With this password, the datasets can also be released individually or in packages.

The maintenance and control intervals are announced or selected on the display, relating to the effective confition of the unit.

Cabin dimensions:	W 760mm (without oil/water separator) D 865mm, H 1710mm
Work room:	W 750mm, D 500mm, Medium utilization height 500 mm
Weight approx.:	160kg
Air volume quantity:	395l/min
Pressure range:	0.5–10bar
Power consumption:	750W
Electrical connection:	230V/50Hz
Air connection:	G 1/4"

Equipment:

Colour Touch Panel for all status displays

Digital entry and automatic ragulation of process parameters (process pressure, pre-acceleration pressure, vacuum, blasting material moisture)

Oil/water separator

Interior lighting36W

LAteral slider left and right (opening W 400 x H 297mm)

Blasting gun hard metal Ø 5mm

Cleaning/air outlet valve in the blasting room

Heating system

Vonceyance injector unit with blasting material pre-acceleration

Automatic blasting material processing via integrated granulate separator

Integrated regulated filter system

Saving datasets with password protection

Monitored process parameters

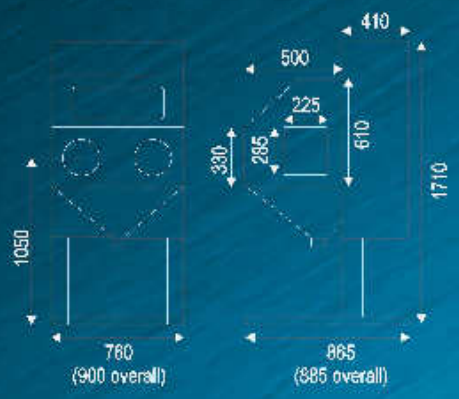

1	Integrated manual turntable Ø 400mm, loading capacity up to 800kg.
2	Multiply sealed passages. They can be used instead of the lateral sliders.

The micro blasting units XS 55 were developed as compact units to process smaller surfaces. The basic of the casing design come from a success story of over 15 years. Beyond that, the main technical successes from the decades of experience with the 75-series were used in the new type model. In summary, this resulted in a cost-effective and yet highly technical blasting device.
By using a frequency converter, the ventilator works on ideal effective level in every rotation range, which is not possible when using dampers. The digital pressure displays for pre-acceleration and process pressure that are available as options allow clear setting and is therefore also completely reproducible in later work processes.

Xintech MasterFinish XS 55

The fine compact machine.

1 2

XINTECH Systems
by Sablux

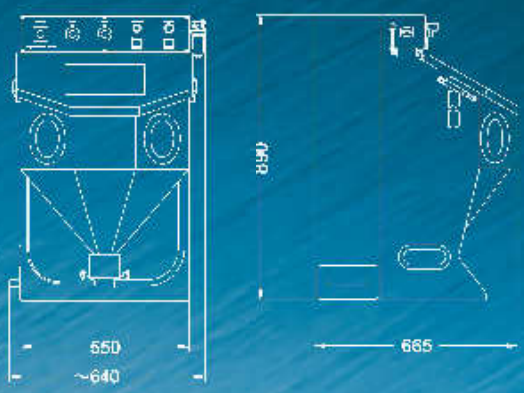

Cabin dimensions:	W 550mm, D 665mm, H 890mm
Work room:	W 545mm, D 370mm, Medium utilization height 350 mm
Power consumption:	230VA
Electrical connection:	230V/50Hz/60Hz
Air connection:	G 1/4"
Pressure range:	0.5–6 bar (Connecting pressure minimal 6bar)

Equipment:

Operating flap, lateral equipped with two gas pressure cylinders (opening 545mm x 300mm)

Viewing window with replaceable frame with two screws accessible from the outside.

Suction and filter unit, regulated via a smooth potentiometer (frequency converter), equipped with two high performance-micro filter-cartridges that are automatically cleaned pneumatically in standby and pause operation.

Micro-blasting-material-separation unit can be optimized over ventilator torque.

Outlet gun powered over grid pressure

Pressurized air connection including oil/water separator G 1/4"

Impulse foot switch

Latrally operable dust drawer made of steel

Two-pole three level switch (zero, standby and blast)

Two piece perforated metal work grid with single hole diameter Ø 5mm, capacity up to 50 kg

Firmly screwed working gloves

Blasting material drying system, regulated via smooth potentiometer with touch protection, 0-150 Watt (Option)

Blasting gun with hard metal valve insert Ø 4mm

Process blasting pressure adjustable from 0-6bar, pre-acceleration pressure adjustable from 0-2bar via pressure regulating valve and analogous display on the operating panel.

1	Digital pressure displays (2-colour) for pre-acceleration and process pressure (Option)
2	Base for sitting or standing operation

Satellite unit SX 140 S

Satellite-units are ideal for processing of rotating equal and/or similar work pieces. The dimension of the unit is adapted to the component, whereas the passage and the nozzle interval are the core criteria. The work pieces are led through areas that are divided into blasting and outled sectors. The component is always led to the blasting guns and blasting in front of them. The rotating movement (satellite) is continued in the outlet sector. The selection of the material from which the unit components are made of, as well as the expansion of the processing and control guarantee the customer a concept that is exactly based on his needs and respective products. Loading resp. removing the pieces can be done either manually meaning partially automated or via handling system (robots, Pick&Place).

Image: Satellite SX 140 S with container and sifting plant.

Satellite unit SX 115 S automated

This unit has 8 blasting guns that deburr and clean the work piece in two separate blasting chambers and one separate outlet sector. The upstream handling system guarantees the necessary autonomy of the unit concept via blister procedures. In order to guarantee the positioning accuracy of the transfer station, all components like carrier, stallite plate etc. are turned after creation. Intervals are set via step-by-step motion gear. The work pieces can be processed according to defined positions so that a mechanical blasting gun is used. The parts are blasted in double cycles so that on the one hand, and increase of piece and on the other a minimization of the time can be achieved.

Robot cell

Robojober.

The project of a compact robot cell solution was developed in cooperation with our robot partner company. The concept Robojober was developed in order to be able to process components on point on the smallest floor space possible. The 5 kg robot integrated in the cell serves as handling and movement system. An optional feed-in system conveys the components to a defined retrieval position by means of component carriers. The robot retrieves the components individually and performs the desired blasting movement. In order to prevent blasting material exit, the unit possesses a pneumatic passage system. The wear proof rubber of the passage was tested specifically for this usage and further serves as protection for the robot head. After successful blasting the component is positioned at the identical carrier position and the cycle starts again.

Portal-robot blasting unit

The solution approach of a portal unit is offered in order to be able to process work pieces in several work steps with different blasting media. The process path is ensured vie overhead robot.
The loading and removal of the work pieces is done according to defined transport systems. Sand blasting units and the matching blasting material processing system are firmly screwed to the portal. The pneumatic passage system on the back walls of the cabins prevents blasting material from entering the interior of the unit concept.
Outlet chambers clean the component between the downstream blasting processes.

Extendable turntable

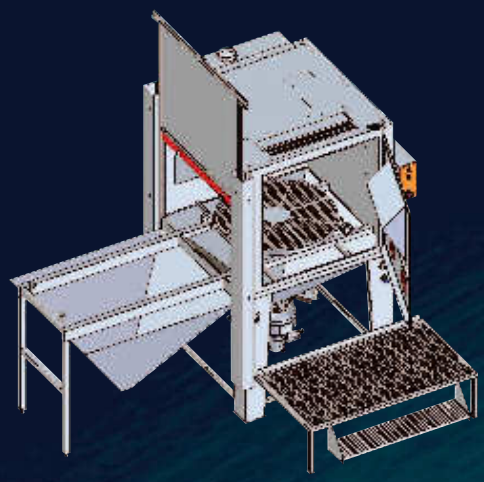

SX 140 S with extendable turntable. Optionally in injection or pressure blasting procedure.

Sand balsting cabin with extendable electrical turntable. Work pieces with a central capacity of up to 1000 kg can be loaded outside of the cabin easily accessible.
The realization of your need from the concept to the completeley product.

Blasting cabin with movement range

Sand blasting cabin SX 270 S with horizontal and vertical movement range on the cabin roof.

The frame construction serves the fixation of narrow, long work pieces that have to be blasted on both sides. A pneumatic, front lift door enables ideal access to the interior of the cabin.
The stroke length of the movement ranges are adjustable, so that the economic value of the currently processed product is given.

Coordinate unit

Sand blasting cabin with coordinate system and downstram round sifter unit.

Pressure blasting pots are filled continunously via a sifter tower including magnetic separation. The blasting material quantity is monitored with load cells.

Automated blasting cells

Sand blasting machie SX 120 S.

The components are lead from the side via automatic solutions into the interior of the cabin. Blasting guns guarantee an even blasting process by the defined positioning. The number of blasting guns is variable according to the component size and the interval time to be achieved. A lateral reserve silo with inlet screw guarantee the necessary autonomy. The rubber lining, made of Linatex, ensures ideal protection against wear and damages when using abrasive blasting material.

Pressure blasting unit concept

for processing several component shapes.

SX 300 S Pressure blasting cabin with side tables.

Two processing options via turntable or shaft drive for various work piece diameters.

Pressure blasting unit concept

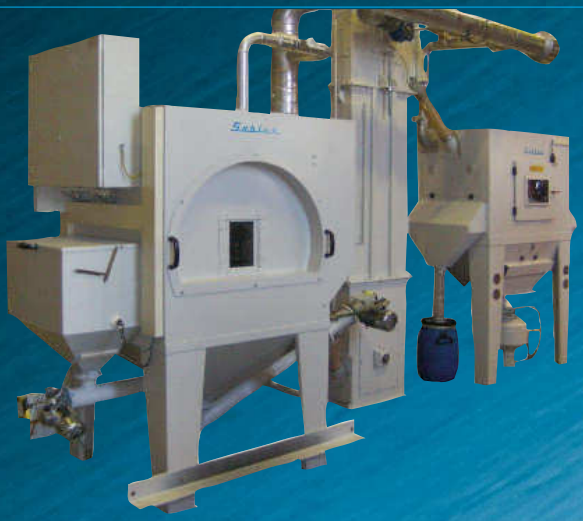

Sand blasting cabin SX 100 S.

With downstream blasting material processing of a reproducible surface roughness. Work piece processing via robots by passages conveyance screw, container, sifter and dust separator round off the equipment.

Our dry blasting devices are high performance presure blasting devices. We recommend usage with protective gear and helmet (incl. fresh air supply).

Serial equipemt:

Open jet devices with 8m to 60m long action range

Remote control

Safety valve

Sifter insert 3.5mm

Pressure display 0-15bar

Optional with Quick-Stop installation: Pot is kept under pressure in case of blasting interruption.

All common blasting material up to grain size of 3.5mm can be used.

VSA-devices are frequently used in the following areas:

Concrete renovation

Steel renovation

Pot cleaning processes

Application in blasting rooms

VSA-Devices

Type	VSA/C 24	VSA/C 80	VSA/C 200	VSA/C 230	VSA/C 300
Pot volume in litre:	24	80	200	230	300
Lenght x Width x Height in mm:	470x560x830	800x850x1070	800x1000x1410	800x1000x1460	800x1060x1600
Empty weight in kg:	30	95	140	190	245
Tube length Standard/max. in m:	5/8	10/20	20/30	20/60	20/60
Required compressor performance at 7bar in litres:	1100	3500	4600	4600	7200
Blasting operating pressure max. in bar:	max. 12	max. 12	max. 12	max. 12	max. 12
Blasting capacity max. in min:	approx. 10	approx. 20	approx. 40	approx. 50	approx. 55
Hart metal valve Ø in mm:	Ø 4	Ø 7	Ø 8	Ø 8	Ø 10
Air connectiong ":	Ø ¾	Ø 1	Ø 1¼	Ø 1¼	Ø 1¼

Delta

Open jet device for on point work with back absorption.

Excellent for the removal of paint residue, rust and dirt. Efficient because of the closed blasting material circle and fast blasting material exchange.

Length x Width x Height:	1100 x 500 x 1530 mm
Weight:	150 kg
Tube lengths:	Standard 5m, max. 15 m
Ventilator:	2.2 Kw, (220V)
Air consumption:	At 7 bar, 1154 l/min
Blasting pressure:	Max. 12 bar
Blasting nozzle:	Ø 4 mm (hard metal)
Blasting material capacity:	25 kg

Blasting rooms | Container

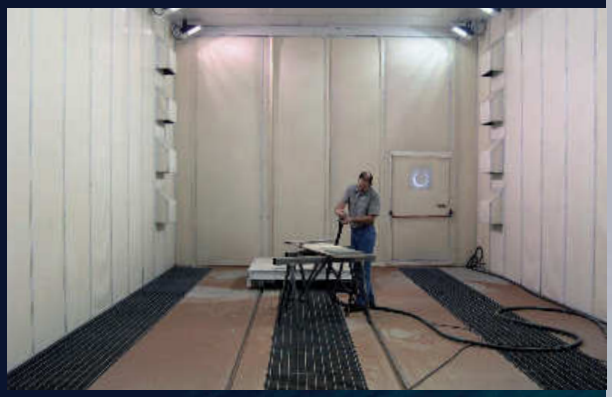

Equipped for large-dimension work.

Blasting rooms in robust modular system are designed, dimensioned and mounted according to the size desired by the customer

The corresponding conveying, processing and filter systems round off the unit concept.

The compact blasting room.

The solution approach of a blasting container is based on the flexibility, the compactness and the economics of a smaller blasting room concept.

Compactness.
Larger work pieces can also be realized in compact dimensions thanks to the offer of various container dimensions.

Economic value.
The omittance of the conveyor units and the standard modular concept form an economically interesting unit concept.

Flexibility.
Blasting device and dust separators are integrated on the backside of the blasting container, separated from the blasting room. The selection of the location of the blasting container is therefore flexible and changeable.

Tubes.

We also deliver highly flexible, low-wear tubes in the sector of cooling and air conditioning systems that are designed for temperature up to 260°C

Low-wear, as there is no direct friction. Glass fibre serves as intermediate layer between steel cover and material. The length finishing is one in-house according to your wishes.

Special products

Quick couplings in brass and stainless steel.

We deliver all necessary fittings in brass in the field of cooling and temperatur control system (all nipple types are available in rust free steel). The profiles and the dimensions are compatible with most systems on the market. Our fabrication is equipped with state-of-the-art production machines and allows the manucfacture of customer-specific versions. In order to prevent personal injury, we recommend using the XINTECH safety couplings for material temperatures 80°C and more.
The insertion connection cannot be separated without the unlocking funktion. This way, unintentional decoupling (for example due to impact) is not possible.

Vacuum devices.

Reasons for using vacuum for injection moulding:

No air inclusions

No burnings (Diesel effect)

No burr formation

Maximized flow paths

Reduced injection pressure

Lower tool strain

Unfalsified illustration of the cavity surface

	Gammavac 15	Gammavac 25
Pump:	P6010 Si32-3X4	P6010 Si32-3X4
Air (compressed air):	4–6bar (1/2" mnimum passages 9 mm)	
Tank content (depending on use):	0 – 10 Liter (2 litres modular)	0 – 10 Liter (2 litres modular)
Dimensions(WxHxD):	500 x 300 x 450 mm	500 x 300 x 450 mm
Weightt:	21 Kg without tank	22 Kg without tank
Vacuum connections:	1" free passageway (min. 24 mm)	
Vacuum measurement line:	3 mm Test 15 (keep measuring line as short as possible)	
Interface:	Potential free	Potential free (EUROMAP optional)
Operation:	Command over button	Touchscreen
Connection:	230V 50/60 Hz 1.0 A	230V 50/60 Hz 1.0 A

The hereafter described blasting materials are available in stock.

If your desired blasting material is not listed please contact us.

Sablux blasting material

Corundum 70-fold magnification (edged grain)

Abrasive blasting material	Depending on the surface material and the result to be achieved different blasting material is used.
Areas of apllication:	General cleaning, roughening and pre-treatment of the surface
	Removal of residues like paint, scale, corrosions etc.
	Structuring a surface
	Achievement of a desired surface roughness
	Inscribing and satin finishing
Blasting material selection:	Electro corundum special fused
	Electro corundum
	Broken glass
	Silicium carbide
	Brass powder

Plastic granulate 70-fold magnification (edged, soft grain)

Soft, edged blasting material	While metal often require blasting material in a similar composition, the plastic branch and mould manufacturers use soft edged blasting materials like Duroplaste or vegetable blasting media (nutshtell granulate). Cleaning is done abrasion-free and is therefore very gentle to the basic material.
Areas of application:	Cleaning of plastic covers on screws & compounding elements
	Cleaning of coverings in mould manufacture
	Cleaning of soot accumulation in combustion engines etc.
Blasting media selection:	Plastic pellets
	Nutshell granulate

Non-abrasive blasting media

In surface refining, blasting is done with round grain. This produces a finer surface. Next to glass beads and ceramic beads, ferrite and stainless steel beads may also be used.

Areas of application:

- Matting, smoothing and compressing of surfaces
- Surface hardening (Shot-Peening)
- Reshaping and sealing a surface
- Surface finish

Blasting media:

- Glas beads
- Ceramic beads
- Steel balls

Top: Glas pearls 160-fold magnification (ball shaped)
Bottom: Ceramic pearls 160-fold magnification (ball shaped)

Hard materials

We recommend using hard material to seal and increase skid-proofness

Areas of application:

Usage on stairs, industrial floors and for improving wear-resistance on road surface.

Protect yourself against unwanted surprises in your blasting process. We are gladly advise you and deliver ex factory in Bachenbülach.

Full Service

«It's easier to try than worry about it»
Our ready-to-use test blasting room is available for your practical tests.
We have all common blasting media in various grain sizes available.

Spare parts - even for units that have been in use for over 30 years.

Wide blasting media assortment.

Maintenance and repair service - also for systems of other manufactureres.
Consulting, designing, construction, final assembly and start up of individually produced high performance units.

Sablux sandblasting units are characterized by functionality, high performance and long lifetimes.

Benefit from our specialist competence and our strengths.

Sandblsting technolgy in a one-stop-shop in typical Swiss quality.

Our business customers and partners within and outside of the country value our Sablux quality.

For over 50 years.

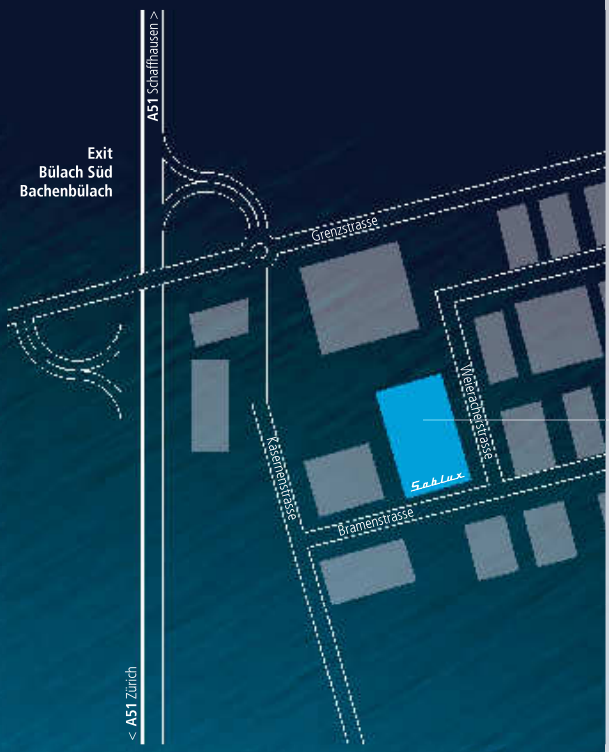

Our sales and construction offices, administration, test laboratory and assembly halls are located close to Zurich (at the airport) at the autobahn exit «Bülach Süd | Bachenbülach».

Sablux Technik AG

Bramenstrasse 14
CH–8184 Bachenbülach

Tel. +41 **43 411 44 22**
Fax +41 43 411 44 23
www.sablux.ch

Sandblasting technology
Unit construction
Metalworking
Engineering
Micro blasting technology XINTECH

Member: Swiss metal union:

Certification:

Representation:

Sablux Technik AG

Bramenstrasse 14
CH–8184 Bachenbülach

Tel. +41 **43 411 44 22**
Fax +41 43 411 44 23
www.sablux.ch

The fine difference